TWIN-ARM MIXER ARM

Mixing is an essential step in bread making, as it determines the structure, hydration and flavor of the bread.

Designed for intensive use, the ARM twin-arm mixer ensures consistent and long-lasting performance over time, while delivering high-quality kneading that respects the dough.

Cast iron frame, oil-bath mechanics, stainless steel bowl and arms, two speeds: a reliable and precise solution, available in three capacities from 60 to 160 kg (132 to 353 lb) of dough.

View the ARM mixer on merand.fr ›













MERAND
Le maître d'œuvre de la pâte

ARM 60
60 kg (132 lb) of dough

ARM 100
100 kg (220 lb) of dough

ARM 160
160 kg (353 lb) of dough

ARM - FIXED-BOWL TWIN-ARM MIXER

The ARM mixer embodies the MERAND philosophy: reliability, robustness and efficiency for professionals. Designed for intensive use, it ensures consistent and long-lasting performance over time, with a kneading process that respects the dough's structure and quality.

Three models available, in Standard or Bronze version:

- **ARM 60**: 60 kg (132 lb) of dough
- **ARM 100**: 100 kg (220 lb) of dough
- **ARM 160**: 160 kg (353 lb) of dough

Key advantages:

- Pressure-cast iron frame, oil-bath mechanical movements and sealed ball bearings: smooth, quiet and maintenance-free operation.
- Bowl, kneading arms and all components in contact with the dough made entirely of stainless steel: optimal hygiene, easy cleaning, excellent resistance to wear.
- All moving parts mounted on ball bearings: smooth, precise and long-lasting operation.
- Two operating speeds: the mixer adapts to all types of dough, including soft or enriched doughs.

Depending on version:

- High-position stop, 2 electromechanical timers with automatic speed change, automatic braking system (details on next page).





ARM - EQUIPMENT AND SPECIFICATIONS





HIGH-POSITION STOP

For easier cleaning and dough removal.



2 ELECTROMECHANICAL TIMERS

With automatic speed change.

AUTOMATIC BRAKING SYSTEM

Instant stop of the kneading arms when needed: activating the stop button ensures immediate immobilization, unlike a standard motor which takes 2 to 3 seconds to stop.

	ARM 60		ARM 100		ARM 160	
	Standard	Bronze	Standard	Bronze	Standard	Bronze
High-position stop		✓		✓	✓	✓
2 electromechanical timers		✓		✓	✓	✓
Automatic braking system						✓
Bowl capacity*	60 kg (132 lb) of dough		100 kg (220 lb) of dough		160 kg (353 lb) of dough	
Strokes per minute 1st / 2nd speed	42 / 62		42 / 62		40 / 60	
Power (kW)	1.5 to 2.2		1.8 to 3.1		3.3 to 4.4	
Weight	415 kg (915 lb)		630 kg (1,389 lb)		745 kg (1,642 lb)	

**Capacities given as an indication only; several parameters may affect capacity, including dough hydration, temperature and stiffness.*

ARM - DIMENSIONS (mm)

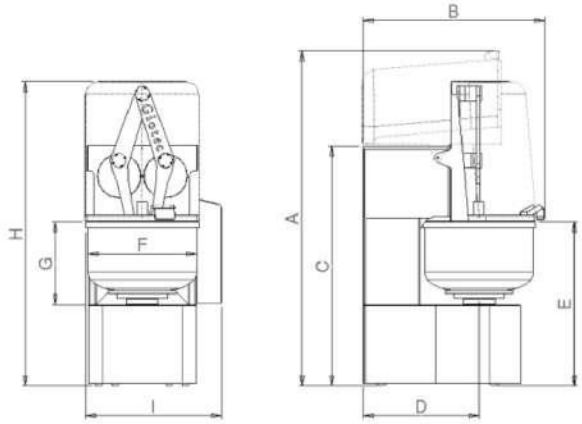

	ARM 60
A	1 625
B	885
C	1 153
D	557
E	802
F	560
G	412
H	1 461
I	675

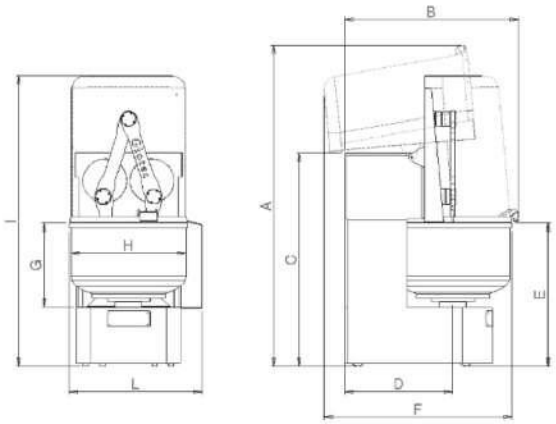

	ARM 100
A	1 860
B	1 015
C	1 220
D	615
E	837
F	1 085
G	507
H	680
I	1 660
L	765

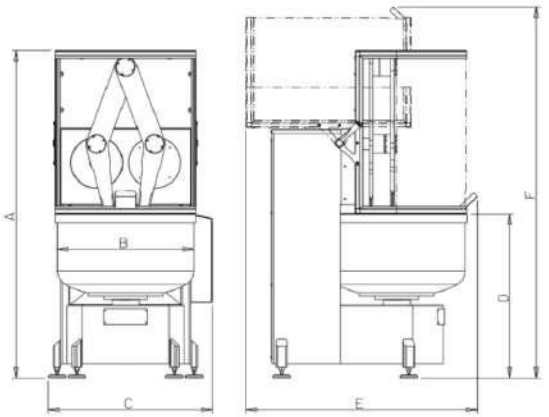

	ARM 160
A	1 860
B	830
C	925
D	970
E	1 300
F	2 110

Electrical specifications

ARM 60: 400 V / 50 Hz / 1.5 to 2.2 kW / 5.1 to 5.8 A three-phase

ARM 100: 400 V / 50 Hz / 1.8 to 3.1 kW / 7.7 to 8.7 A three-phase

ARM 160: 400 V / 50 Hz / 3.3 to 4.4 kW / 7.9 to 9.3 A three-phase

Hygiene and safety

ARM mixers comply with:

- the Machinery Directive 2006/42/EC;
- the French Labour Code.

MERAND MIXERS AND LIFTERS RANGE



PAXO · oblique-axis View sheet ›



SpiFix · fixed-bowl spiral View range ›



SpiMouv · removable-bowl spiral View sheet ›



SpiSwing · self-tilting View sheet ›



Bowl lifters EC-Back › EC-Side ›



SkyBac · bin lifter View sheet ›

MERAND
Le maître d'œuvre de la pâte

Z.I. La Turbanière, 35530 Brécé, France
+33 (0)2 99 04 15 30 · salesdpt@merand.fr
www.merand.fr